ICC-ES Evaluation Report

ESR-3448

Reissued October 2024

Revised July 2026

This report remains under an active continuous compliance program through the end of October 2026.

This report also contains:

- **City of LA Supplement**
- **CA Supplement**
- **FL Supplement w/ HVHZ**

ICC-ES Evaluation Reports are not to be construed as representing aesthetics or any other attributes not specifically addressed, nor are they to be construed as an endorsement of the subject of the report or a recommendation for its use. There is no warranty by ICC Evaluation Service, LLC, express or implied, as to any finding or other matter in this report, or as to any product covered by the report.

Copyright © 2026 ICC Evaluation Service, LLC. All rights reserved.

DIVISION: 06 00 00—WOOD, PLASTICS AND COMPOSITES Section: 06 05 23—Wood, Plastic, and Composite Fastenings	REPORT HOLDER: MITEK® INC.	EVALUATION SUBJECT: MITEK® TRUSS CONNECTORS FOR WOOD-FRAMED CONSTRUCTION	

1.0 EVALUATION SCOPE

Compliance with the following codes:

- 2024, 2021, 2018, 2015 and 2012 *International Building Code®* (IBC)
- 2024, 2021, 2018, 2015 and 2012 *International Residential Code®* (IRC)

Property evaluated:

Structural

2.0 USES

The MiTek structural connectors described in this report (see Table 14 for a complete listing) are used to connect wood framing members in accordance with Section 2304.10.4 of the 2024 and 2021 IBC (Section 2304.10.3 of the 2018 and 2015 IBC and Section 2304.9.3 of the 2012 IBC). The connectors may also be used in structures regulated under the IRC when an engineered design is submitted to, and approved by, the code official, in accordance with Section R301.1.3 of the IRC.

3.0 DESCRIPTION

3.1 BN Breakfast Nook Hanger:

The BN Breakfast Nook Hanger is designed to connect four sets of mono-trusses or other wood-framing members in the traditional “breakfast nook” configuration. The hanger is cold-formed from No. 14 gage steel, and is prepunched for installation with 10d common nails into the header and 10d by $1^1/_2$-inch-long nails into the joist. The hanger joints are factory-welded with $^1/_8$-inch (3.2 mm) fillet welds. See Table 1 and Figure 1 for product dimensions, fastener schedule, allowable loads, and typical installation details.

3.2 LDSC4 and DSC4 Drag Strut Connectors:

The LDSC4 and DSC4 Drag Strut Connectors are designed to tie wooden truss chord members to the top plates in a wall system. The connectors are fabricated from No. 14 gage or No. 3 gage hot-rolled steel. The DSC4 is prepunched with holes for installation with MiTek Pro Series WS3 wood screws, which are provided with the device. The LDSC4 Drag Strut is prepunched for installation with 10d by $1^1/_2$-inch-long nails. See Table 2 and Figure 2 for product dimensions, fastener schedule, allowable loads, and a typical installation detail.

3.3 FTC Floor Truss Clip:

The FTC Floor Truss Clip is designed to transfer vertical loads between two floor trusses having single-ply chords or double-ply chords to allow the two trusses to act as a single floor girder truss. The clip is cold-formed from 18 gage steel, and is prepunched for 10d common or 10d by $1^1/_2$-inch-long nails. See Table 3 and Figure 3 for product dimensions, fastener schedule, allowable loads, and typical installation details.

3.4 GT Girder Truss Hanger:

The GT girder truss hanger is designed to hang girder trusses off of other girder trusses or other wood supporting members. The U-shaped portion of the hanger is fabricated from No. 7 gage hot-rolled steel plate, and is factory welded to the back plate, which is fabricated from No. 3 gage hot-rolled steel plate. The U-shaped portion of the hanger is prepunched for installation with 16d common nails, and the back plate of the hanger is provided with holes allowing the installation of either $^3/_4$-inch- or 1-inch-diameter (19.1 or 25.4 mm) bolts. See Tables 4A and 4B for product dimensions and required fasteners, Table 4B for allowable loads, and Figure 4 for a typical installation detail.

3.5 HCPRS Hurricane/Seismic Anchor:

The HCPRS Hurricane/Seismic Anchor is designed to tie trusses and rafters to top plates for the purpose of resisting uplift, lateral and transverse loads. The anchor is cold-formed from No. 18 gage steel, and is prepunched for installation with 8d common or 8d by $1^1/_2$-inch-long nails. See Table 5 and Figure 5 for product dimensions, fastener schedule, allowable loads, and a typical installation detail.

3.6 HGA10 Hurricane Gusset Angle:

The HGA10 Hurricane Gusset Angle is a connector designed to connect trusses, joists, or rafters to top plates. The connector is cold-formed from No. 14 gage steel, and is prepunched for installation with MiTek Pro Series WS3 or WS15 wood screws, which are supplied with the device. See Table 6 and Figure 6 for product dimensions, fastener schedule, allowable loads, and typical installation details.

3.7 HHCP Hurricane/Seismic Anchor:

The HHCP Hurricane/Seismic Anchors are designed to connect hip rafters or trusses to wall top plates, such that the rafter or truss bisects the 90-degree angle between the two intersecting wall planes. The HHCP2 anchor is cold-formed from No. 18 gage steel, and is prepunched for installation with 10d by $1^1/_2$-inch-long nails. The HHCP4 anchor is cold-formed from No. 16 gage steel and is prepunched for installation with 10d common nails. See Table 7 and Figure 7 for product dimensions, fastener schedule, allowable loads, and a typical installation detail.

3.8 HJC Hip/Jack Connectors:

The HJC Hip/Jack Connectors are designed to support single-ply hip and jack trusses from double-ply girder trusses. The hip truss is installed at 45 degrees with respect to the jack truss. The HJC series connectors are cold-formed from No. 12 gage steel, and are prepunched for installation with 16d common nails to be installed into the supporting truss or girder bottom chord and 10d common nails for nailing into the hip and jack members. See Table 8 and Figure 8 for product dimensions, fastener schedule, allowable loads, and typical installation details.

3.9 HTC Heavy Truss Deflection Clip:

The HTC4 Heavy Truss Clip provides lateral support for non-load-bearing walls while allowing floor and roof trusses to deflect. The HTC4 is cold-formed from No. 16 gage steel; and is prepunched for 10d-by-$1^1/_2$-inch nails into plate and 10d-by-$1^1/_2$-inch nails into the truss/rafter. See Table 9 and Figure 9 for product dimensions, fastener schedule, allowable loads, and a typical installation detail.

3.10 RT Hurricane Tie:

The RT Hurricane Ties are designed to connect roof rafters and trusses to their supporting construction. All RT series connectors, except the RT10 and the RT20, connect roof rafters or trusses to the top plate. The RT10 and RT20 connect the rafter or truss to both the top plate and the vertical wall stud below. RT connectors are fabricated from No. 18 or No. 16 gage steel, and are prepunched for installation with 8d common, 8d by $1^1/_2$-inch-long, 10d common or 10d by $1^1/_2$-inch-long nails. See Table 10 and Figure 10 for product dimensions, fastener schedule, allowable loads, and typical installation details.

3.11 SBP Supplementary Bearing Plate:

The SBP supplementary bearing plate is used to connect rafters and trusses to the top plate, to resist uplift loads, as well as in-plane horizontal loads parallel and perpendicular to the top plate. The SBP supplementary bearing plate is provided as a two-piece installation (one on each side of the member being supported). The SBP plate is cold-formed from No. 16 gage steel, and is prepunched for installation with 10d common nails into the plate and either 10d common nails or 10d by $1^1/_2$-inch-long nails into the truss. See Table 11 and Figure 11 for product dimensions, fastener schedules, allowable loads, and a typical installation detail.

3.12 STC Scissor Truss Clip:

The STC Scissor Truss Clip is designed to connect a single-ply scissor truss to nominally 2-by-4, 2-by-6 or 2-by-8 wall top plates. The connector is cold-formed from No. 12 gage steel, and has prepunched horizontal nail slots for horizontal adjustment of the scissor truss, and prepunched flanges for installation with 10d by $1^1/_2$-inch-long nails into wall top plates. See Table 12 and Figure 12 for product dimensions, fastener schedule, allowable loads, and a typical installation detail.

3.13 TSP Stud Plate Tie:

The TSP Stud Plate Tie is designed to connect a single or double top plate or sill plate to a wall stud, and can also be used for connecting a roof rafter or truss to the top plate of a supporting wall. Optional diamond nail holes allow for various uplift capacities for single or double plate installation conditions. Single top plate or sill plate applications require the installation of the specified nails into all round holes of the connector. Double top plate to stud connections and truss/rafter to double top plate connections (rafter tie application) require the installation of the specified nails into all round and all diamond holes of the connector to support the increased loads. TSP connectors are fabricated from No. 16 gage steel and are prepunched for installation with 10d by $1^1/_2$-inch-long or 10d common nails. See Tables 13A, 13B and Figure 13 for product dimensions, fastener schedules, allowable loads, and typical installation details.

3.14 Materials:

3.14.1 Steel: The specific types of steel and corrosion protection for each product are described in Table 14 of this evaluation report. Minimum base-steel thicknesses for the different gages are shown in the following table:

GAGE NO.	MINIMUM BASE-STEEL THICKNESS (inch)
18	0.044
16	0.055
14	0.070
12	0.099
7	0.171
3	0.240

For **SI:** 1 inch = 25.4 mm.

3.14.2 Wood: Wood members must be sawn lumber or structural glued laminated timber (glulam) with a minimum specific gravity of 0.50, or approved structural composite lumber (SCL) with a minimum equivalent specific gravity of 0.50, unless otherwise noted in the applicable table within this report. Wood members must have a moisture content not exceeding 19 percent (16 percent for glulam and SCL), except as noted in Section 4.1. For connectors installed with nails in compliance with Section 3.14.3.2, or MiTek WS Series wood screws, in compliance with Section 3.14.3.3, the thickness of each wood member must be sufficient such that the specified fasteners do not protrude through the opposite side of the member, unless otherwise permitted in the applicable table within this report. Refer to Section 3.14.4 for issues related to treated wood.

3.14.3 Fasteners: Required fastener types and sizes for use with the MiTek connectors described in this evaluation report are specified in Sections 3.13.3.1 through 3.13.3.3 and in Tables 1 through 13.

3.14.3.1 Bolts: At a minimum, bolts must comply with ASTM A36 or ASTM A307, and must have a minimum bending yield strength of 45,000 psi (310 MPa). Bolt diameters must be as specified in the applicable tables of this evaluation report.

3.14.3.2 Nails: Nails used for connectors described in this report must be bright or hot-dipped galvanized carbon steel nails complying with material requirements, physical properties, tolerances, workmanship, protective coating and finishes, and packaging and package marking requirements specified in ASTM F1667; and must have lengths, diameters and bending yield strengths, F_{yb}, as shown in the following table:

FASTENER DESIGNATION	FASTENER LENGTH (inches)	SHANK DIAMETER (inch)	MINIMUM REQUIRED F_{yb} (psi)
8d x $1^1/_2$	1.5	0.131	100,000
8d common	2.5	0.131	100,000
10d common	3.0	0.148	90,000
10d x $1^1/_2$	1.5	0.148	90,000
16d common	3.5	0.162	90,000

For **SI:** 1 inch = 25.4 mm, 1 psi = 6,895 Pa

Alternatively, nails of other materials or finishes may be used when they are recognized in an ICC-ES evaluation report as having bending yield strength and withdrawal capacity equal to or better than those of a bright carbon steel of the same nominal diameter.

3.14.3.3 Wood Screws: The wood screws used with the HGA and DSC connectors must be MiTek WS Series WS3 and WS15 wood screws, as described in ESR-2761. The appropriate size of WS Series wood screw must be used, as indicated in the applicable tables of this evaluation report.

3.14.4 Use in Treated Wood: Connectors used in contact with preservative-treated or fire-retardant-treated wood must comply with Section 2304.10.6 of the 2024 and 2021 IBC (Section 2304.10.5 of the 2018 and 2015 IBC and Section 2304.9.5 of the 2012 IBC) and Section R304.3 of the 2024 IRC (Section R317.3 of the 2021, 2018, 2015 and 2012 IRC). The lumber treater or the holder of this report (MiTek Inc.), or both, should be contacted for recommendations on the appropriate level of corrosion resistance for the connectors and fasteners as well as the connection capacities of the fasteners used with the specific proprietary preservative-treated or fire-retardant-treated lumber. Nails must be hot-dipped galvanized carbon steel nails. Alternatively, nails of other materials and finishes may be used when they are recognized in an ICC-ES evaluation report for use in the applicable treated lumber and have equivalent or greater capacities as those required in this report.

4.0 DESIGN AND INSTALLATION

4.1 Design:

The allowable loads given in Tables 1 through 13 are based on allowable stress design. The use of the allowable loads for the products listed in Table 14 must comply with all applicable requirements and conditions specified in this evaluation report. The tabulated allowable loads are for normal load duration and/or short load duration, based on load duration factors, C_D, in accordance with Section 11.3.2 of the 2024, 2018 and 2015 *National Design* Specification® *for Wood Construction* (NDS), as indicated in Tables 1 through 13 of this evaluation report (Section 10.3.2 of the 2012 NDS for the 2012 IBC and IRC). No further increases are permitted for load durations other than those specified. The tabulated allowable loads are for connections in wood used under continuously dry conditions where the maximum moisture content in wood is 19 percent (16 percent for SCL) or less, and sustained temperatures are limited to 100°F (37.8°C) or less. When connectors are installed in wood having a moisture content greater than 19 percent (16 percent for SCL), or where the in-service moisture content in wood is expected to exceed this value, the applicable wet service factor, C_M, for dowel-type fasteners must be applied, unless otherwise noted in the tables of this report. When connectors are installed in wood that will experience sustained exposure to temperatures exceeding 100°F (37.8°C), the allowable loads in this evaluation report must be adjusted by the temperature factor, C_t, specified in the NDS. The group action factor, C_g, in the NDS, has been accounted for, in the tabulated allowable loads, where applicable. For connectors installed with bolts, minimum edge distances and end distances within the wood members must be met, such that the geometry factor, C_Δ, is 1.0, in accordance with 2024, 2018 and 2015 NDS Section 12.5.1 (2012 NDS Section 11.5.1 for the 2012 IBC and IRC). Connected wood members must be checked for load-carrying capacity at the connection in accordance with 2024, 2018 and 2015 NDS Section 11.1.2 (2012 NDS Section 10.1.2 for the 2012 IBC and IRC).

4.2 Installation:

Installation of the MiTek connectors must be in accordance with this evaluation report and the manufacturer's published installation instructions. Bolts must be installed in accordance with 2024, 2018 and 2015 NDS Section 12.1.3 (2012 NDS Section 11.1.3 for the 2012 IBC and IRC. MiTek WS Series wood screws must be installed in accordance with ESR-2761.

4.3 Special Inspection:

4.3.1 Main Wind-Force-Resisting System under the IBC: Periodic special inspection must be conducted for components within the main wind-force-resisting system, where required in accordance with Sections 1704.2 and 1705.12 of the 2024 and 2021 IBC (Sections 1704.2 and 1705.11 of the 2018 and 2015 IBC, or Sections 1704.2 and 1705.10 of the 2012 IBC) as applicable.

4.3.2 Seismic-Force-Resisting System under the IBC: Periodic special inspection must be conducted for components within the seismic-force-resisting system, where required, in accordance with Sections 1704.2 and 1705.13 of the 2024 and 2021 IBC (Sections 1704.2 and 1705.12 of the 2018 and 2015 IBC, or Sections 1704.2 and 1705.11 of the 2012 IBC) as applicable.

4.3.3 Installation under the IRC: Special inspections are normally not required for connectors used in structures regulated under the IRC. However, for components and systems requiring an engineered design in accordance with IRC Section R301, periodic special inspection requirements and exemptions must be in accordance with Sections 4.3.1 and 4.3.2 of this report.

5.0 CONDITIONS OF USE:

The MiTek connectors described in this report comply with, or are suitable alternatives to what is specified in, those codes listed in Section 1.0 of this report, subject to the following conditions:

5.1 The connectors must be manufactured, identified, designed, and installed in accordance with this report and the manufacturer's published installation instructions. A copy of the manufacturer's published installation instructions must be available at the jobsite at all times during installation. In the event of a conflict between this report and the manufacturer's published installation instructions, this report governs.

5.2 Calculations showing compliance with this report must be submitted to the code official. The calculations must be prepared by a registered design professional where required by the statutes of the jurisdiction in which the project is to be constructed.

5.3 Connected wood members and fasteners must comply with Sections 3.14.2 and 3.14.3, respectively.

5.4 Adjustment factors, noted in Section 4.1 of this report and the applicable codes, must be considered where applicable.

5.5 Use of connectors and fasteners with preservative-treated or fire-retardant-treated lumber must be in accordance with Section 3.14.4.

5.6 Factory-welded connectors identified in Table 14 are manufactured at the designated facilities under an approved quality control program with inspections by ICC-ES.

6.0 EVIDENCE SUBMITTED

Data in accordance with the ICC-ES Acceptance Criteria for Joist Hangers and Similar Devices (AC13), dated October 2018 (editorially revised February 2024).

7.0 IDENTIFICATION

7.1 The connectors described in this report are identified by the product model (stock) number, the number of the ICC-ES index evaluation report for MiTek (ESR-2685), and by one or more of the following designations: MiTek, USP, or Structural Connectors.

7.2 The report holder's contact information is the following:

MITEK® INC.
16023 SWINGLEY RIDGE ROAD
CHESTERFIELD, MISSOURI 63017
(800) 328-5934
www.mitek-us.com
uspcustomerservice@mii.com

TABLE 1—BN BREAKFAST NOOK HANGER ALLOWABLE LOADS[1,2,3,4,5,6]

STOCK NO.	STEEL GAGE	DIMENSION (in.)		FASTENER SCHEDULE				ALLOWABLE LOADS[6] (lbs)			
		H	L	Header		Joist		Download			Uplift
				Qty.	Type	Qty.[5]	Type	C_D=1.0	C_D=1.15	C_D=1.25	C_D=1.6
BN264	14	$5^3/_8$	10	20	10d common	8	10d-$1^1/_2$	2,640	3,035	3,145	585
BN284	14	$7^1/_8$	10	20	10d common	8	10d-$1^1/_2$	2,640	3,035	3,145	585

For **SI:** 1 inch = 25.4 mm, 1 lb = 4.45 N.

[1]Allowable loads have been adjusted for load duration factors, C_D, as shown, in accordance with the NDS. The allowable loads do not apply to loads of other durations, and are not permitted to be adjusted for other load durations. See Sections 4.1 and 4.2 for additional design and installation requirements.
[2]Allowable loads shown are for installations in wood members complying with Section 3.14.2.
[3]See Section 3.14.3 for required fastener dimensions and mechanical properties.
[4]The BN hanger supports four members simultaneously. Each supported member must be 1.5 inches (38 mm) wide.
[5]Two nails must be installed in each of four members for a total of eight nails.
[6]Allowable loads must be distributed equally (within 10%) among the four supported members, and the sum of uplift loads from all four members must not exceed the tabulated allowable load shown.

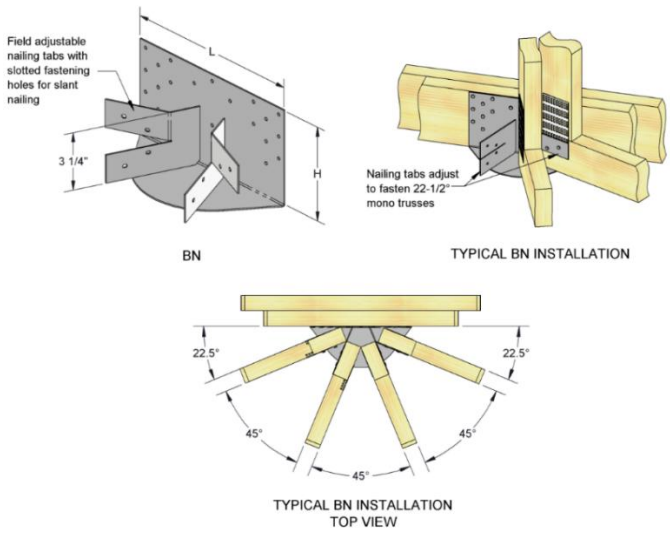

FIGURE 1—BN BREAKFAST NOOK HANGER

TABLE 2—DSC AND LDSC DRAG STRUT ALLOWABLE LOADS[1,2,3]

STOCK NO.	STEEL GAGE	DIMENSION (in.)		FASTENER SCHEDULE				ALLOWABLE LOADS (lbs)	
				Truss		Top Plate		Tension	Compression
		W	L	Qty.	Type	Qty.	Type	C_D=1.6	C_D=1.6
LDSC4L/R	14	2	$10^1/_2$	9	10d-$1^1/_2$	9	10d-$1^1/_2$	1,505	1,500
DSC4L/R	3	$3^1/_4$	21	16	WS3	16	WS3	4,655	4,965

For **SI:** 1 inch = 25.4 mm, 1 lb = 4.45 N.

[1]Allowable loads have been adjusted for a load duration factor, C_D, of 1.6, corresponding to a ten minute load duration (i.e., wind or earthquake loading), in accordance with the NDS. The allowable loads do not apply to loads of other durations. See Sections 4.1 and 4.2 for additional design and installation requirements.
[2]Allowable loads shown are for installations in wood members complying with Section 3.14.2.
[3]See Section 3.14.3 for required fastener dimensions and mechanical properties.

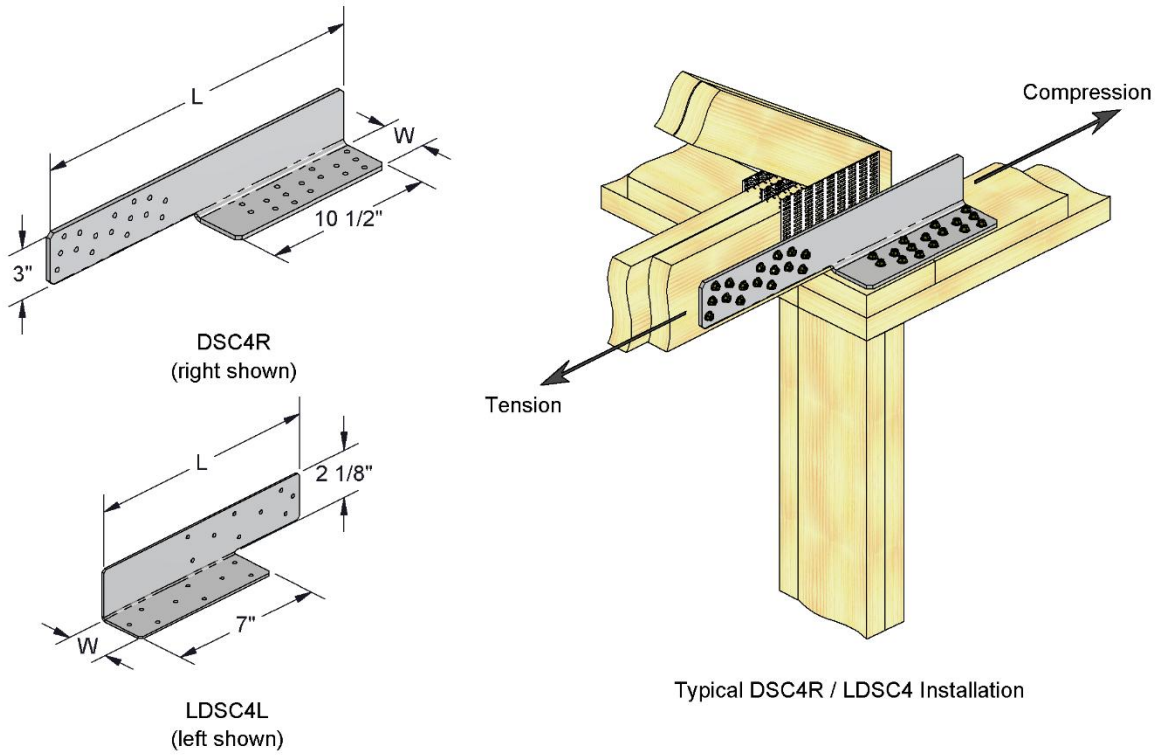

FIGURE 2—DSC AND LDSC DRAG STRUT

TABLE 3—FTC FLOOR TRUSS CLIP ALLOWABLE LOADS[1,2,3,4,5,6,7]

STOCK NO.	WOOD MEMBER DESCRIPTION	STEEL GAGE	DIMENSIONS (in.)			FASTENERS		ALLOWABLE LOADS[8] (lbs)
			W_1	W_2	H	Qty.	Type	C_D=1.0
FTC1	1 ply 4 x 2	18	$3^1/_2$	$3^1/_{16}$	$1^1/_2$	10	10d common	865
FTC1F	1 ply 4 x 2	18	$3^1/_{16}$	—	$4^3/_8$	10	10d common	865
FTC2	2 ply 4 x 2	18	$3^1/_2$	$3^1/_{16}$	3	10	10d common	865
FTC2F	2 ply 4 x 2	18	$3^1/_{16}$	—	$4^3/_8$	10	10d common	865
FTC32	1 ply 3 x 2	18	$2^1/_{16}$	$2^1/_2$	$1^1/_2$	10	10d x $1^1/_2$	680

For **SI:** 1 inch = 25.4 mm, 1 lb = 4.45 N.

[1]Allowable loads have been adjusted for load duration factors, C_D, as shown, in accordance with the NDS. The allowable loads do not apply to loads of other durations, and are not permitted to be adjusted for other load durations. See Sections 4.1 and 4.2 for additional design and installation requirements.
[2]Allowable loads shown are for installations in wood members complying with Section 3.14.2.
[3]See Section 3.14.3 for required fastener dimensions and mechanical properties.
[4]The FTC1, FTC1F, and FTC32 clips are intended for use with the single ply chord floor truss systems; and the FTC2 and FTC2F clips are intended for use with the double ply chord floor truss systems.
[5]The FTC clips must be installed in pairs, or multiples of two, on either side of, and within twelve inches of a concentrated load.
[6]To transfer uniform loads, the FTC clip should be installed in regular intervals along the length of the truss, and located at panel points.
[7]The FTC clip should be installed on the top chord of the truss, and, if necessary, along the bottom chord in addition.
[8]Tabulated allowable loads apply only to vertical loads transferred from one truss chord to an adjacent truss chord.

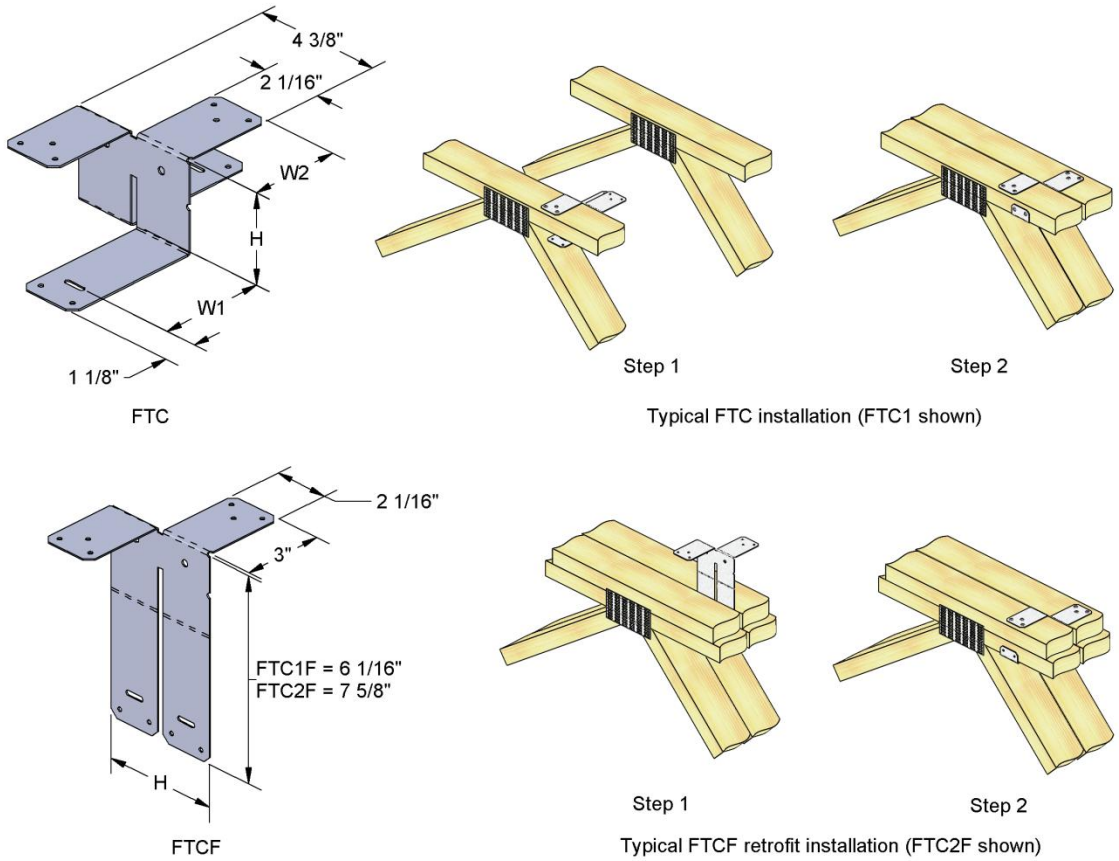

FIGURE 3—FTC FLOOR TRUSS CLIP

TABLE 4A—GT GIRDER TRUSS HANGER DIMENSIONS AND REQUIRED FASTENERS[1,2,3]

SUPPORTED MEMBER	STOCK NO.	STEEL GAGE		DIMENSIONS (inches)					FASTENER SCHEDULE			
		Back Plate	Strap	W1	L	H	D	B	Supporting Truss (Bolts)		Supported Truss (Nails)	
									Qty.	Dia. (in.)	Qty.	Type
2 Ply	GT2T2B	3	7	$3^7/_{16}$	6	19	$4^1/_2$	$9^1/_4$	2	$^3/_4$	12	16d Common
	GT2T2BH	3	7	$3^7/_{16}$	6	$22^1/_4$	$4^1/_2$	$9^1/_4$	2	1	12	16d Common
	GT2T3B	3	7	$3^7/_{16}$	6	22	$4^1/_2$	$9^1/_4$	3	$^3/_4$	12	16d Common
	GT2T4B	3	7	$3^7/_{16}$	$7^1/_4$	19	$5^1/_2$	$9^1/_4$	4	$^3/_4$	12	16d Common
	GT2T6B	3	7	$3^7/_{16}$	$7^1/_4$	22	6	$9^1/_4$	6	$^3/_4$	12	16d Common
	GT2T6BH	3	7	$3^7/_{16}$	$7^1/_4$	$26^1/_4$	6	$9^1/_4$	6	1	12	16d Common
	GT2T8B	3	7	$3^7/_{16}$	$7^1/_4$	25	6	$9^1/_4$	8	$^3/_4$	12	16d Common
3 Ply	GT3T3B	3	7	$5^1/_8$	6	22	$4^1/_2$	$9^1/_4$	3	$^3/_4$	12	16d Common
	GT3T3BH	3	7	$5^1/_8$	6	$26^1/_4$	$4^1/_2$	$9^1/_4$	3	1	12	16d Common
	GT3T4B	3	7	$5^1/_8$	$7^1/_4$	19	$5^1/_2$	$9^1/_4$	4	$^3/_4$	12	16d Common
	GT3T4BH	3	7	$5^1/_8$	$7^1/_4$	$22^1/_4$	$5^1/_2$	$9^1/_4$	4	1	12	16d Common
	GT3T6B	3	7	$5^1/_8$	$7^1/_4$	22	6	$9^1/_4$	6	$^3/_4$	12	16d Common
	GT3T6BH	3	7	$5^1/_8$	$7^1/_4$	$26^1/_4$	6	$9^1/_4$	6	1	12	16d Common
	GT3T8B	3	7	$5^1/_8$	$7^1/_4$	25	6	$9^1/_4$	8	$^3/_4$	12	16d Common
	GT3T8BH	3	7	$5^1/_8$	$7^1/_4$	$30^1/_4$	6	$9^1/_4$	8	1	12	16d Common
4 Ply	GT4T4B	3	7	$6^1/_2$	$7^1/_2$	19	$5^1/_2$	$9^1/_4$	4	$^3/_4$	12	16d Common
	GT4T4BH	3	7	$6^1/_2$	$7^1/_2$	$22^1/_4$	$5^1/_2$	$9^1/_4$	4	1	12	16d Common
	GT4T6B	3	7	$6^1/_2$	$7^1/_2$	22	6	$9^1/_4$	6	$^3/_4$	12	16d Common
	GT4T6BH	3	7	$6^1/_2$	$7^1/_2$	$26^1/_4$	6	$9^1/_4$	6	1	12	16d Common
	GT4T8B	3	7	$6^1/_2$	$7^1/_2$	25	6	$9^1/_4$	8	$^3/_4$	12	16d Common
5 Ply	GT5T8BH	3	7	$8^1/_8$	$9^1/_4$	$30^1/_4$	6	$9^1/_4$	8	1	12	16d Common

For **SI:** 1 inch = 25.4 mm

[1]See Section 3.14.3 for required fastener dimensions and mechanical properties.
[2]Bolts in the supporting member must be loaded parallel to the wood grain, and proper end and edge distances must be provided in accordance with Section 4.1 of this report.
[3]The vertical portion of the supporting member into which the bolts are inserted must consist of a minimum 2- or 3-ply 2x6 vertical member for 4-bolt hangers, and a minimum 2- or 3-ply 2x8 vertical member for 6- and 8-bolt hangers.

TABLE 4B—GT GIRDER TRUSS HANGER ALLOWABLE LOADS[1,2]

SUPPORTED MEMBER	STOCK NO.	WOOD SPECIES	DOWNLOADS (lbs)				UPLIFT (lbs)
			Supporting Member				
			2 Ply		3 Ply		
			C_D = 1.0	C_D = 1.15	C_D = 1.0	C_D = 1.15	C_D = 1.60
2 Ply	GT2T2B	DF-L	2,950	3,390	3,340	3,840	2,705
		S-P-F	2,515	2,895	3,085	3,475	2,270
	GT2T2BH	DF-L	3,920	4,510	5,550	5,550	2,705
		S-P-F	3,330	3,830	4,660	4,660	2,270
	GT2T3B	DF-L	4,370	5,025	4,985	5,730	2,705
		S-P-F	3,710	4,265	4,590	5,220	2,270
	GT2T4B	DF-L	5,905	6,790	6,680	7,680	2,705
		S-P-F	5,040	5,795	6,175	7,100	2,270
	GT2T6B	DF-L	8,860	10,190	10,020	11,520	2,705
		S-P-F	7,560	8,695	9,260	9,940	2,270
	GT2T6BH	DF-L	11,795	13,565	13,580	13,925	2,705
		S-P-F	9,640	9,940	9,640	9,940	2,270
	GT2T8B	DF-L	11,815	13,585	13,355	13,925	2,705
		S-P-F	9,640	9,940	9,640	9,940	2,270
3 Ply	GT3T3B	DF-L	4,370	5,025	4,985	5,730	2,705
		S-P-F	3,710	4,265	4,590	5,275	2,270
	GT3T3BH	DF-L	5,740	6,605	8,490	8,790	2,705
		S-P-F	4,830	5,555	7,160	7,385	2,270
	GT3T4B	DF-L	5,905	6,790	6,680	7,680	2,705
		S-P-F	5,040	5,795	6,175	7,100	2,270
	GT3T4BH	DF-L	7,865	9,045	11,435	13,150	2,705
		S-P-F	6,685	7,690	9,720	11,180	2,270
	GT3T6B	DF-L	8,860	10,190	10,020	11,520	2,705
		S-P-F	7,560	8,695	9,260	10,650	2,270
	GT3T6BH	DF-L	11,795	13,565	14,860	14,860	2,705
		S-P-F	10,030	11,535	13,075	13,075	2,270
	GT3T8B	DF-L	11,815	13,585	13,355	15,360	2,705
		S-P-F	10,080	11,590	12,350	13,090	2,270
	GT3T8BH	DF-L	15,725	18,085	19,205	19,465	2,705
		S-P-F	13,370	13,765	13,465	13,765	2,270
4 Ply	GT4T4B	DF-L	5,905	6,790	6,680	7,680	2,705
		S-P-F	5,040	5,795	6,175	7,100	2,270
	GT4T4BH	DF-L	7,860	9,040	11,440	11,555	2,705
		S-P-F	6,685	7,685	9,720	10,100	2,270
	GT4T6B	DF-L	8,860	10,185	10,020	11,525	2,705
		S-P-F	7,560	8,690	9,260	10,650	2,270
	GT4T6BH	DF-L	11,790	13,560	14,860	14,860	2,705
		S-P-F	10,025	11,530	13,075	13,075	2,270
	GT4T8B	DF-L	11,810	13,580	13,360	15,365	2,705
		S-P-F	10,080	11,590	12,345	13,090	2,270
5 Ply	GT5T8BH	DF-L	15,690	18,045	19,465	19,465	2,705
		S-P-F	13,340	15,345	16,350	16,350	2,270

For **SI:** 1 inch = 25.4 mm, 1 lb = 4.45 N, 1 psi = 6,895 Pa.

[1]Allowable loads have been adjusted for load duration factors, C_D, as shown, in accordance with the NDS. The allowable loads do not apply to loads of other durations, and are not permitted to be adjusted for other load durations. See Sections 4.1 and 4.2 for additional design and installation requirements.

[2]Allowable loads shown are for installations in wood members complying with Section 3.14.2. For values corresponding to wood species indicated as DF-L, wood members must have a minimum specific gravity of 0.50 and a minimum reference compression perpendicular to grain design value, $F_{c\text{-perp}}$, of 625 psi (4.31 MPa). For values corresponding to wood species indicated as S-P-F, wood members must have a minimum specific gravity of 0.42 and a minimum reference compression perpendicular to grain design value, $F_{c\text{-perp}}$, of 425 psi (2.93 MPa).

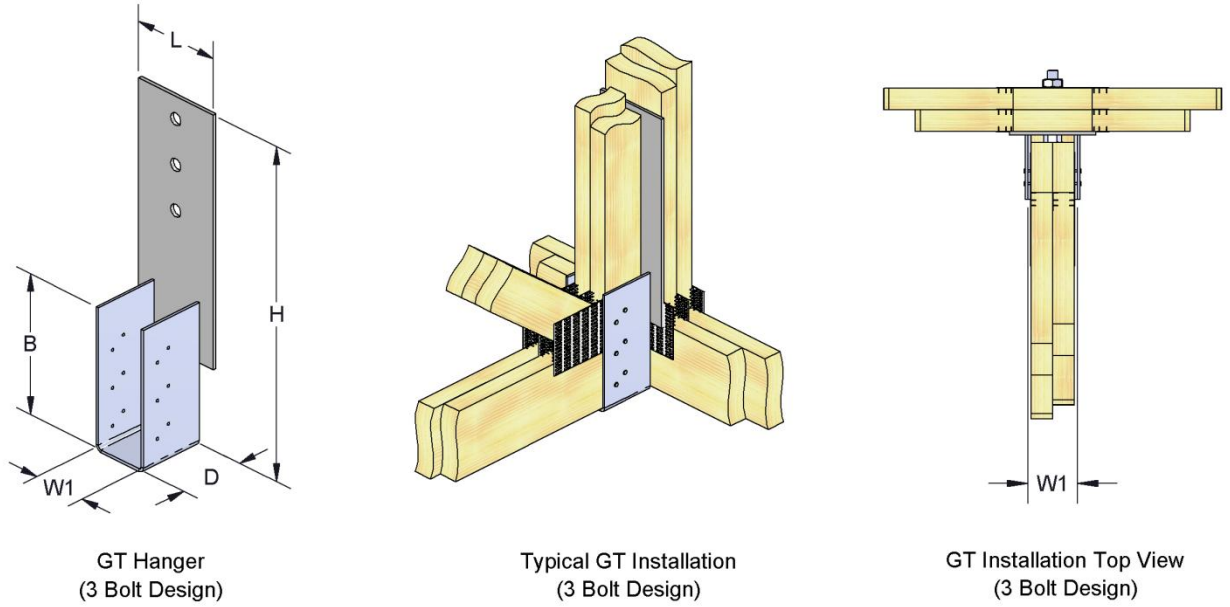

FIGURE 4—GT GIRDER TRUSS HANGER

TABLE 5—HCPRS HURRICANE / SEISMIC ANCHOR ALLOWABLE LOADS[1,2,3,4]

STOCK NO.	STEEL GAGE	FASTENER SCHEDULE				LOAD DIRECTION	ALLOWABLE LOADS (lbs)
		Plate		Rafter			
		Qty.	Type	Qty.	Type		C_D = 1.6
HCPRS	18	5	8d Common	6	8d-1$^1/_2$	Uplift	490
						F_1	525
						F_2	345
						F_3	570

For **SI:** 1 inch = 25.4 mm, 1 lb = 4.45 N.

[1]Allowable loads have been adjusted for a load duration factor, C_D, of 1.6, corresponding to a ten-minute load duration (i.e., wind or earthquake loading), in accordance with the NDS. The allowable loads do not apply to loads of other durations. See Sections 4.1 and 4.2 for additional design and installation requirements.
[2]Allowable loads shown are for installations in wood members complying with Section 3.14.2.
[3]See Section 3.14.3 for required fastener dimensions and mechanical properties.
[4]The F_1 load direction is for lateral loading within the plane of the wall. The F_2 and F_3 load directions are for lateral loading perpendicular to the plane of the wall.

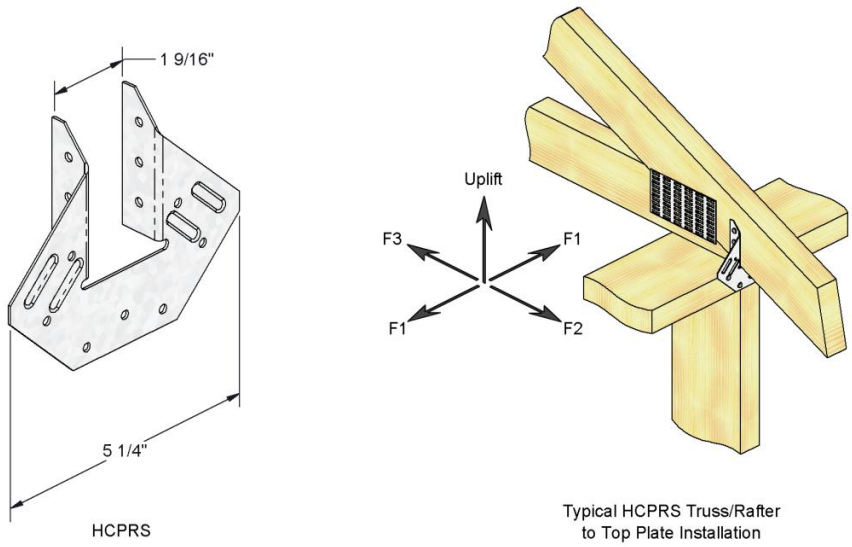

FIGURE 5—HCPRS HURRICANE / SEISMIC ANCHOR

TABLE 6—HGA HURRICANE GUSSET ANGLE ALLOWABLE LOADS[1,2,3,4]

STOCK NO.	STEEL GAGE	DIMENSION (in.)			FASTENER SCHEDULE[3]				Wall Framing	ALLOWABLE LOADS (lbs)			
		W	H	L	Plate		Rafter/Truss			F_1	F_2[4]	F_3	Uplift
					Qty.	Type	Qty.	Type		C_D=1.6	C_D=1.6	C_D=1.6	C_D=1.6
HGA10	14	$3^1/_2$	3	2	4	WS3	4	WS15	**2x4**	1,105	340	835	790
									2x6	1,105	1,065	835	790

For **SI:** 1 inch = 25.4 mm, 1 lb = 4.45 N, 1 psi = 6,895 Pa.

[1]Allowable loads have been adjusted for a load duration factor, C_D, of 1.6, corresponding to a ten minute load duration (i.e., wind or earthquake loading), in accordance with the NDS. The allowable loads do not apply to loads of other durations. See Sections 4.1 and 4.2 for additional design and installation requirements.
[2]Allowable loads shown are for installations in wood members complying with Section 3.14.2.
[3]See Section 3.14.3 for required fastener dimensions and mechanical properties.
[4]Allowable loads in the F_2 direction are based on a MINIMUM reference compression perpendicular to grain design value, $F_{c\text{-}perp}$, of 565 psi (3.90 MPa).

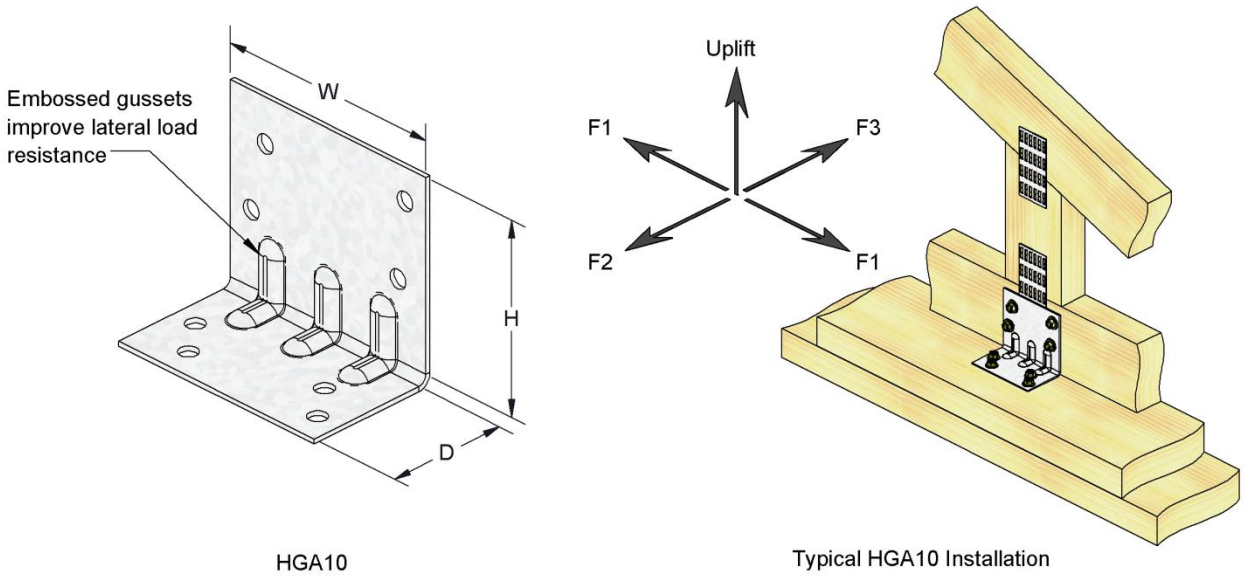

FIGURE 6—HGA HURRICANE GUSSET ANGLE

TABLE 7—HHCP HURRICANE/SEISMIC ANCHOR ALLOWABLE LOADS[1,2,3]

STOCK NO.	STEEL GAGE	TRUSS WIDTH (in.)	DIMENSION (in.)				FASTENER SCHEDULE				ALLOWABLE LOADS (lbs)	
			W	H	B	A	Plate		Rafter/Truss		F_1	Uplift
							Qty.	Type	Qty.	Type	C_D=1.6	C_D=1.6
HHCP2	18	$1^1/_2$	$1^5/_8$	$6^5/_8$	$3^1/_4$	3	10	10d-$1^1/_2$	10	10d-$1^1/_2$	405	680
HHCP4	16	$3^1/_2$	$3^9/_{16}$	$6^5/_8$	$4^7/_8$	3	8	10d Common	10	10d Common	380	1,015

For **SI:** 1 inch = 25.4 mm, 1 lb = 4.45 N.

[1]Allowable loads have been adjusted for a load duration factor, C_D, of 1.6, corresponding to a ten minute load duration (i.e., wind or earthquake loading), in accordance with the NDS. The allowable loads do not apply to loads of other durations. See Sections 4.1 and 4.2 for additional design and installation requirements.
[2]Allowable loads shown are for installations in wood members complying with Section 3.14.2.
[3]See Section 3.14.3 for required fastener dimensions and mechanical properties.

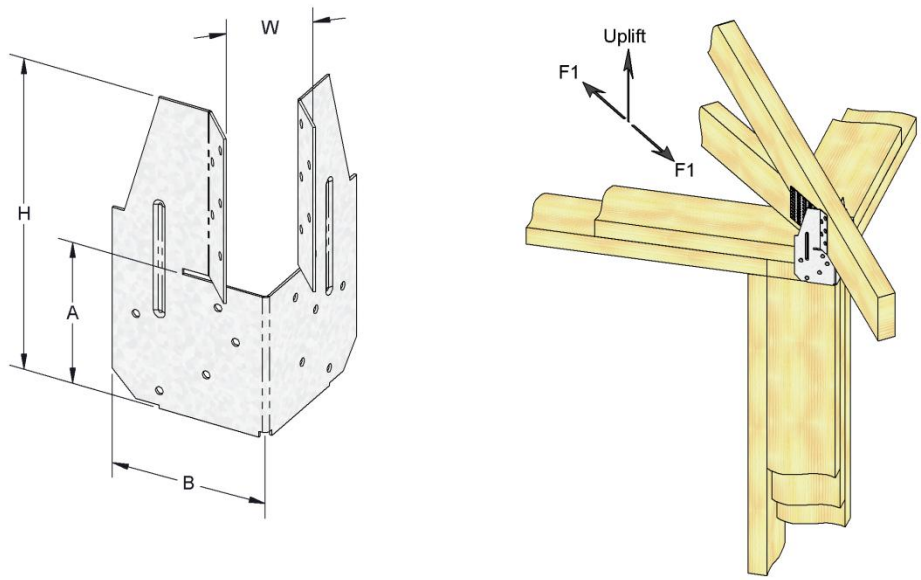

HHCP2
(HHCP4 similar)

Typical HHCP2 Installation
(HHCP4 similar)

FIGURE 7—HHCP HURRICANE/SEISMIC ANCHOR

TABLE 8—HJC HIP/JACK CONNECTOR ALLOWABLE LOADS[1,2,3]

STOCK NO.	STEEL GAGE	DIMENSIONS (in.)			FASTENER SCHEDULE					ALLOWABLE LOADS (lbs)			
		W	H	D	Carrying Truss		Carried Trusses			Download [4]			Uplift [5]
					Qty.	Type	Qty.		Type				
							Jack	Hip		C_D=1.0	C_D=1.15	C_D=1.25	C_D=1.6
HJC26	12	6	$5^3/_8$	$3^1/_4$	16	16d common	7	5	10d common	2,750	3,055	3,265	2,345
HJC28	12	6	$7^1/_8$	$3^1/_4$	20	16d common	8	6	10d common	3,385	3,385	3,385	2,345

For **SI:** 1 inch = 25.4 mm, 1 lb = 4.45 N, 1 psi = 6,895 Pa.

[1]Allowable loads have been adjusted for load duration factors, C_D, as shown, in accordance with the NDS. The allowable loads do not apply to loads of other durations, and are not permitted to be adjusted for other load durations. See Sections 4.1 and 4.2 for additional design and installation requirements.
[2]Allowable loads are for installations in wood members complying with Section 3.14.2. Wood members must also have a minimum reference compression perpendicular to grain design value, $F_{c\text{-}perp}$, of 625 psi (4.31 MPa).
[3]See Section 3.14.3 for required fastener dimensions and mechanical properties.
[4]Allowable downloads are the total allowable download for the hip and jack trusses combined, and assume that 75% of the total load is distributed to the hip truss and 25% is distributed to the jack truss.
[5]Allowable uplift loads on the HJC26 and HJC28 are the total allowable uplift loads for the hip and jack trusses combined, and assume that 75% of the total load is distributed to the hip truss and 25% is distributed to the jack truss.

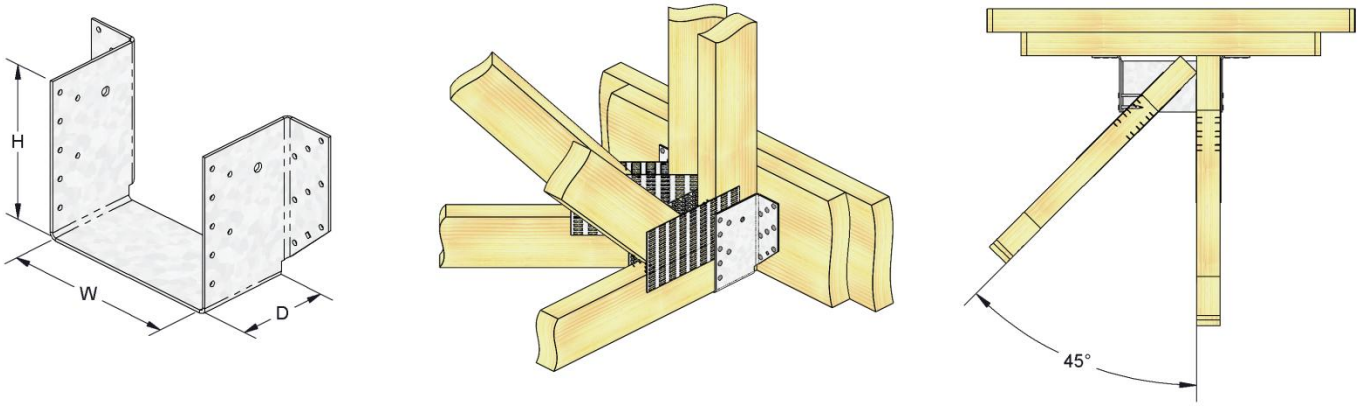

HJC

Typical HJC Installation

Typical HJC Installation
Top View (Left Skew Shown)

FIGURE 8—HJC AND HTHJ HIP JACK CONNECTOR

TABLE 9—HTC HEAVY TRUSS DEFLECTION CLIP

STOCK NO.	STEEL GAGE	DIMENSIONS (in.)				FASTENER SCHEDULE				ALLOWABLE LOADS (lbs) [1,2]					
						Plate		Truss/ Rafter	Type[3]	Without Gap[3]			With $1^1/_4$" Gap[4]		
		W	H	L	D	Top Qty	Side Qty	Qty		F1	F2	F3	F1	F2	F3
										C_D = 1.6					
HTC4	16	$3^1/_2$	$3^1/_4$	$1^{15}/_{16}$	1	2	4	3	10dx$1^1/_2$	655	450	220	235	285	115

For **SI:** 1 inch = 25.4 mm, 1 lbf = 4.45 N, 1 psi = 6.895 kPa.

[1]Allowable loads have been adjusted for load duration factors, C_D, as shown, in accordance with the NDS. The allowable loads do not apply to loads of other durations and are not permitted to be adjusted for other load durations. See Sections 4.1 and 4.2 for additional design and installations requirements.

[2]Allowable loads shown are for installations in wood members complying with Section 3.14.2 and are based on the use of wood members with a reference compression perpendicular to grain design value, $F_{c\text{-}perp}$, of 625 psi or greater.

[3]See Section 3.14.3 for required fastener dimensions and mechanical properties.

[4]Truss/rafter must be bearing on the top plate to achieve the allowable loads under “Without Gap”. When installed with maximum $1^1/_4$" space between truss/rafter and top plate, use loads under "With $1^1/_4$" Gap".

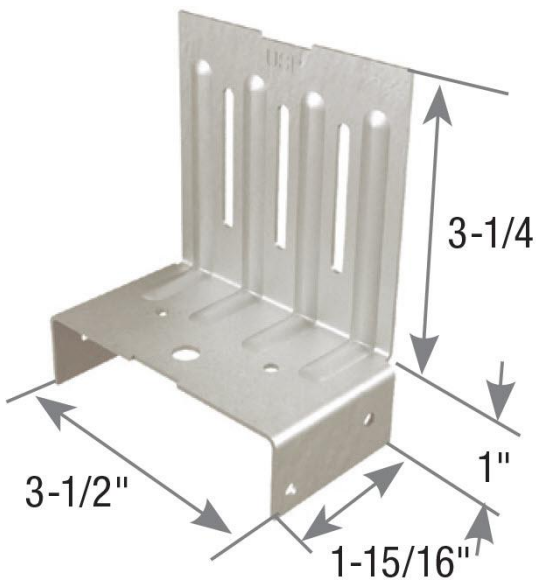

HTC4 Heavy Truss Deflection Clip

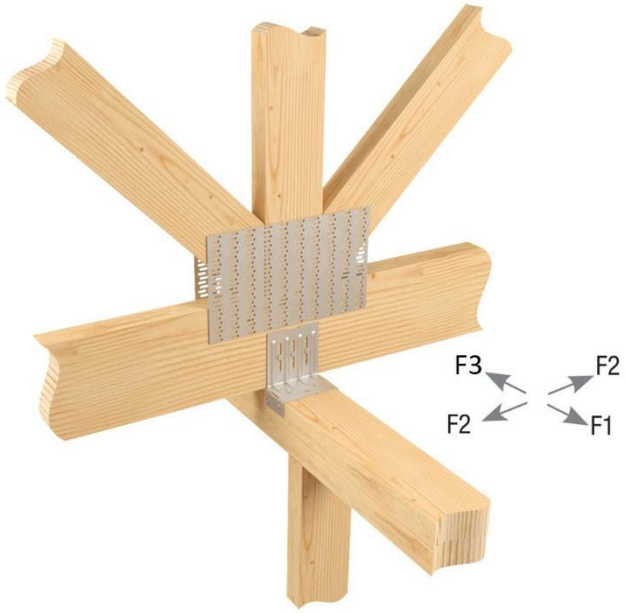

Typical HTC4 installation

FIGURE 9—HTC HEAVY TRUSS DEFLECTION CLIP

TABLE 10—RT HURRICANE TIE ALLOWABLE LOADS[1,2,3]

STOCK NO.	STEEL GAGE	FASTENER SCHEDULE						LOAD DIRECTION	ALLOWABLE LOADS (lbs)
		Rafter / Truss		Plate		Stud			
		Qty.	Type	Qty.	Type	Qty.	Type		C_D=1.6
RT3A	18	4	8d x $1^1/_2$	4	8d Common	—	—	Uplift F_1 F_2 F_3 F_4	350 190 65 130 90
RT4	18	4	8d x $1^1/_2$	4	8d Common	—	—	Uplift F_1 F_2 F_3 F_4	305 205 140 230 230
RT5	18	4	8d x $1^1/_2$	4	8d Common	—	—	Uplift F_1 F_2 F_3 F_4	380 160 80 280 180
RT6	18	8	8d x $1^1/_2$	6	8d Common	—	—	Uplift F_1 F_2	605 835 800
RT7	18	5	8d x $1^1/_2$	5	8d Common	—	—	Uplift F_1 F_2 F_3 F_4	540 270 120 185 140
RT7A	18	5	8d x $1^1/_2$	5	8d Common	—	—	Uplift F_1 F_2 F_3 F_4	640 340 215 220 160
RT7AT	18	5	8d x $1^1/_2$	5	8d x $1^1/_2$	—	—	Uplift F_1 F_2 F_3 F_4	480 250 150 240 165
RT8A	18	5	10d x $1^1/_2$	5	10d x $1^1/_2$	—	—	Uplift F_1 F_2 F_3 F_4	750 265 100 225 150
RT10	18	6	8d x $1^1/_2$	8	8d Common	6	8d x $1^1/_2$	Uplift F_1 F_2 F_3 F_4	540 270 120 185 140
RT15	18	5	8d x $1^1/_2$	5	8d Common	—	—	Uplift F_1 F_2 F_3	500 490 220 415
RT16-2	18	8	8d Common	8	8d Common	—	—	Uplift F_1 F_2 F_3	1,060 780 410 410
RT16A	18	9	10d x $1^1/_2$	8	10d Common	—	—	Uplift F_1 F_2 F_3	1,025 805 490 455

(Continued on next page)

TABLE 10—RT HURRICANE TIE ALLOWABLE LOADS[1,2,3] (continued)

STOCK NO.	STEEL GAGE	FASTENER SCHEDULE						LOAD DIRECTION	ALLOWABLE LOADS (lbs)
		Rafter / Truss		Plate		Stud			
		Qty.	Type	Qty.	Type	Qty.	Type		C_D = 1.6
RT16AR	18	9	10d x $1^1/_2$	8	10d Common	—	—	Uplift F_1 F_2 F_3	1,025 805 490 455
RT 20	16	9	10d x $1^1/_2$	4	10d Common	9	10d x $1^1/_2$	Uplift	1,115

For **SI:** 1 inch = 25.4 mm, 1 lb = 4.45 N.

[1]Allowable loads have been adjusted for a load duration factor, C_D, of 1.6, corresponding to a ten minute load duration (i.e., wind or earthquake loading), in accordance with the NDS. The allowable loads do not apply to loads of other durations. See Sections 4.1 and 4.2 for additional design and installation requirements.

[2]Allowable loads shown are for installations in wood members complying with Section 3.14.2.

[3]See Section 3.14.3 for required fastener dimensions and mechanical properties.

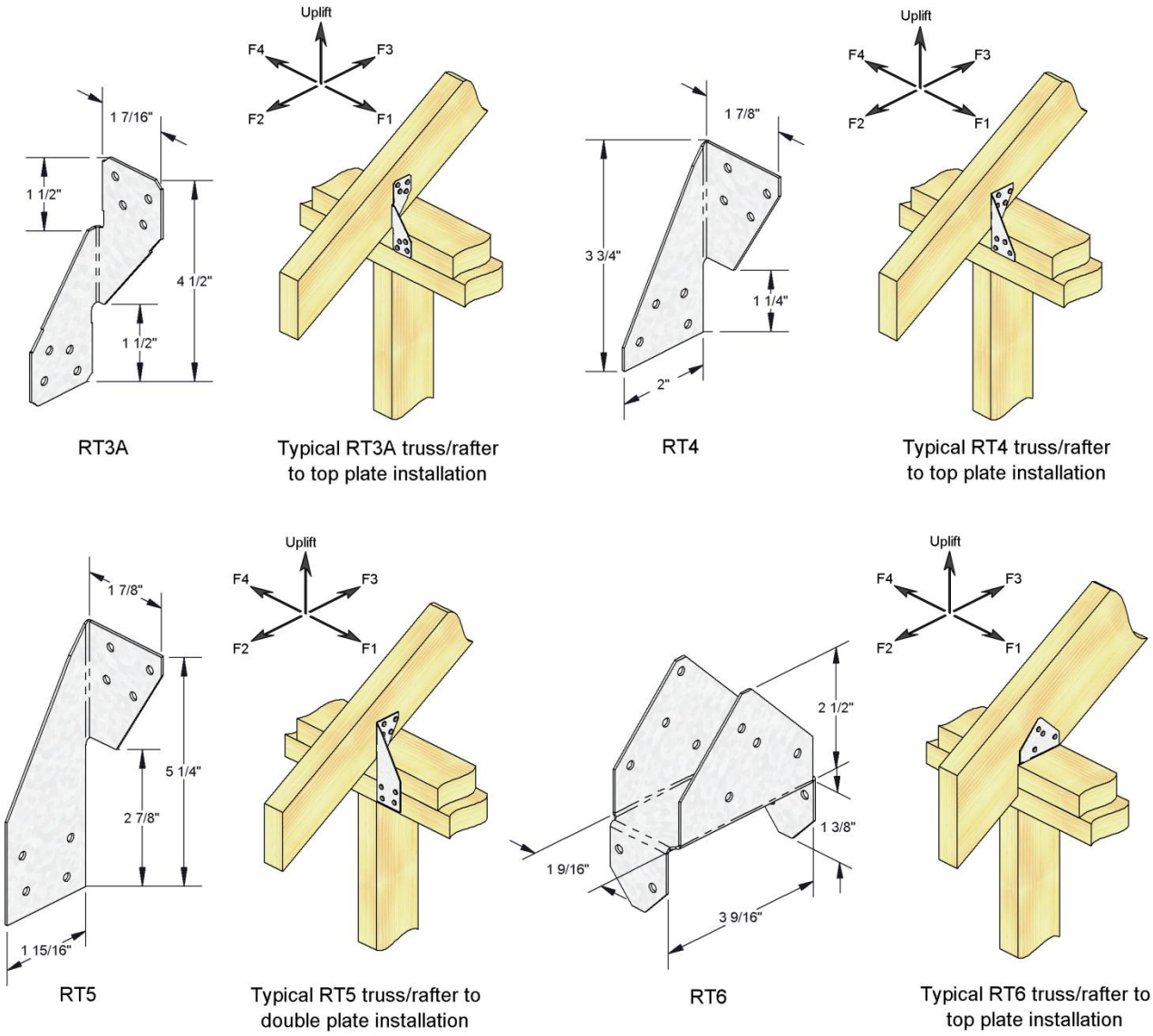

FIGURE 10—RT HURRICANE TIE

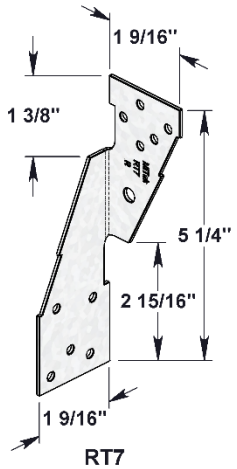

RT7

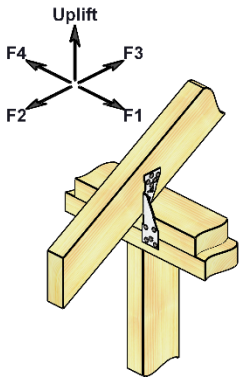

Typical RT7 truss/rafter to double plate installation

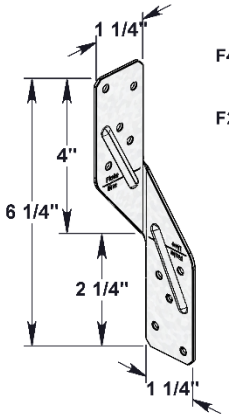

RT7A

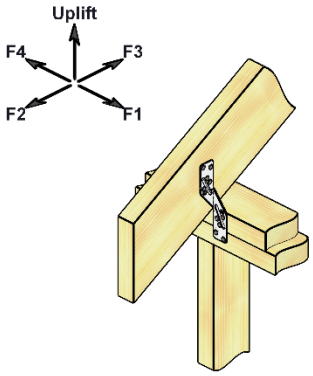

Typical RT7A truss/rafter to double plate installation

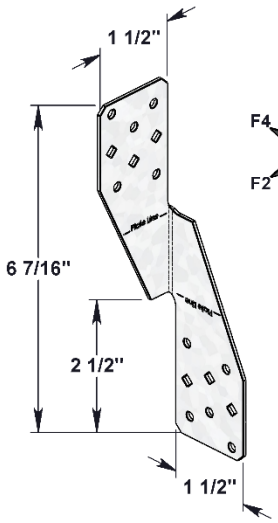

RT7AT

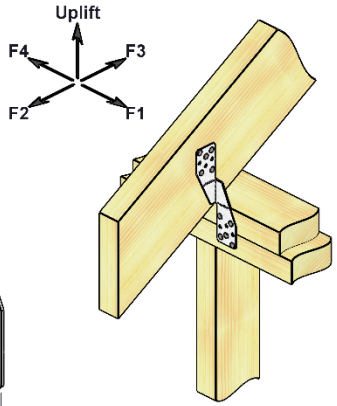

Typical RT7AT truss/rafter to double plate installation

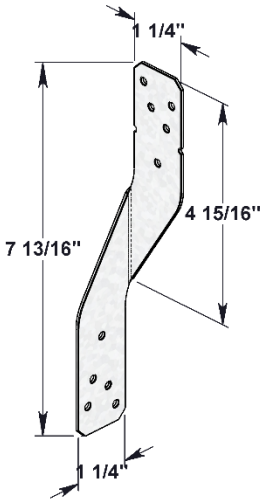

RT8A

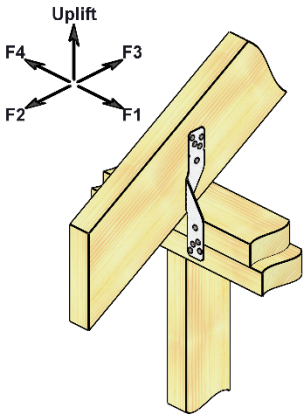

Typical RT8A truss/rafter to double plate installation

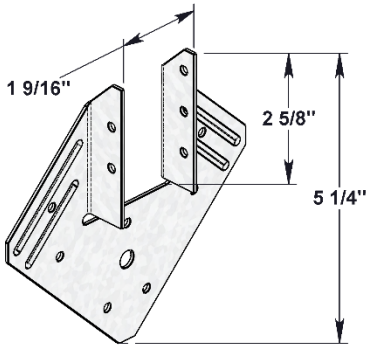

RT15

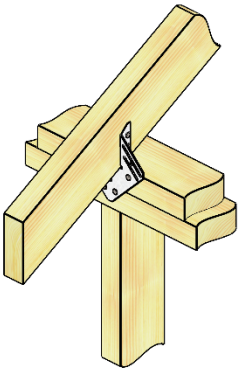

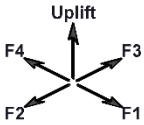

Typical RT15 truss/rafter to double plate installation

FIGURE 10—RT HURRICANE TIE (Continued)

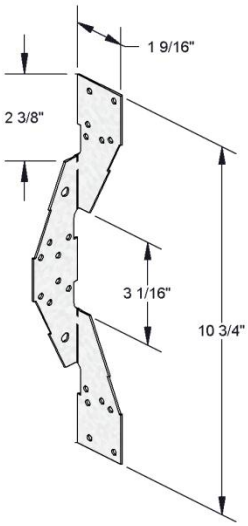

RT10

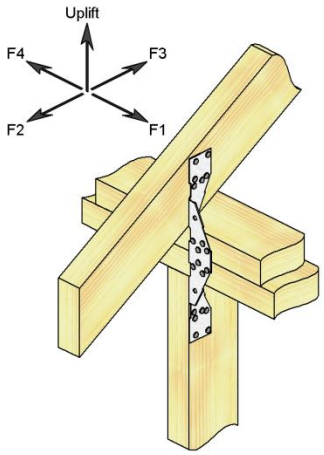

Typical RT10 truss/rafter to double plate to stud installation

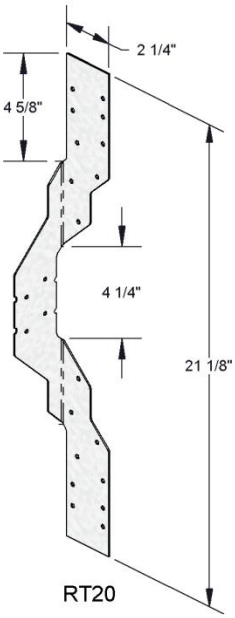

RT20

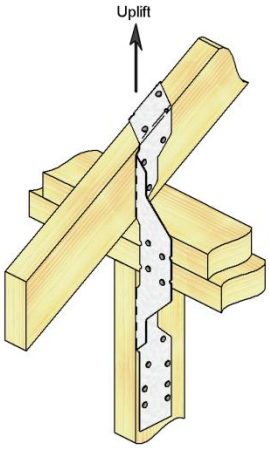

Typical RT20 truss/rafter to double plate to stud installation

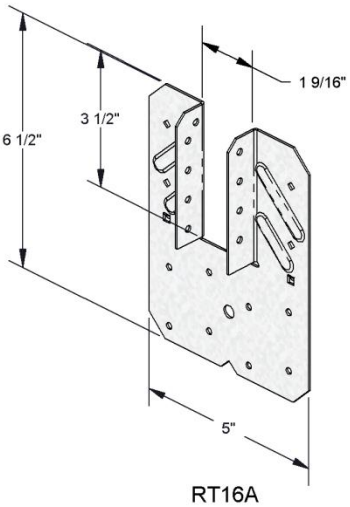

RT16A

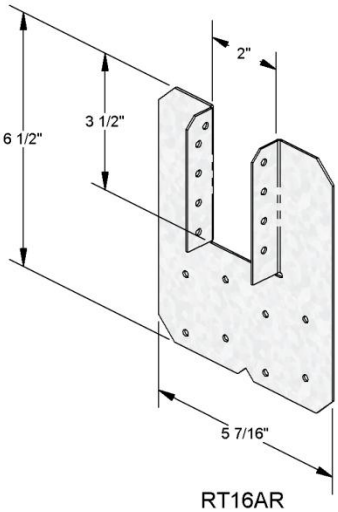

RT16AR

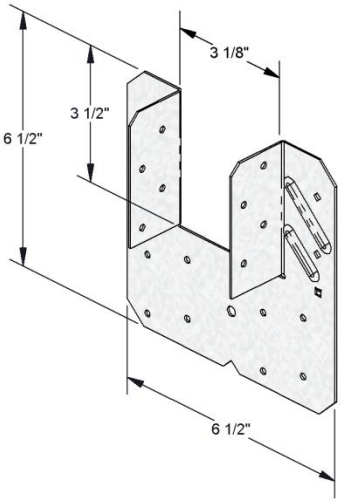

RT16-2

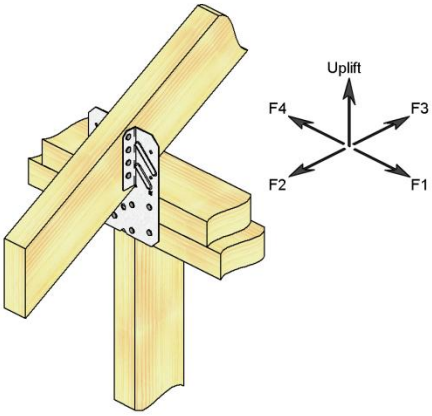

Typical RT16A truss/rafter to double plate installation (RT16AR, RT16-2 similar)

FIGURE 10—RT HURRICANE TIE (Continued)

TABLE 11—SBP SUPPLEMENTARY BEARING PLATE ALLOWABLE LOADS[1,2,3,4]

STOCK NO.	STEEL GAGE	DIMENSION (in.)				FASTENER SCHEDULE					ALLOWABLE LOADS (Per Pair) (lbs)					
						Plate			Truss		Bearing $F_{c\text{-}perp}$ = 625 psi			F1	F2	Uplift
		W	H	L	D	Top Qty.	Side Qty.	Type	Qty.	Type	C_D = 1.00	C_D = 1.15	C_D = 1.25	C_D=1.6	C_D=1.6	C_D=1.6
Truss Thickness $2^7/_8$ Inches or Less																
SBP4	16	$3^1/_2$	$4^1/_4$	2	1	4	8	10d com.	20	10d-$1^1/_2$	2,500	2,805	2,955	1,530	1,625	1,205
SBP6	16	$5^1/_2$	$3^1/_4$	2	1	4	8	10d com.	28	10d-$1^1/_2$	3,500	3,930	4,235	1,530	1,625	1,205
Truss Thickness 3 Inches and Greater																
SBP4	16	$3^1/_2$	$4^1/_4$	2	1	4	8	10d com.	20	10d com.	2,500	2,805	2,955	1,530	1,625	1,205
SBP6	16	$5^1/_2$	$3^1/_4$	2	1	4	8	10d com.	28	10d com.	3,500	3,930	4,235	1,530	1,625	1,205

For **SI:** 1 inch = 25.4 mm, 1 lb = 4.45 N, 1 psi = 6,895 Pa.

[1]Allowable loads have been adjusted for load duration factors, C_D, as shown, in accordance with the NDS. The allowable loads do not apply to loads of other durations, and are not permitted to be adjusted for other load durations. See Sections 4.1 and 4.2 for additional design and installation requirements.
[2]Allowable loads shown are for installations in wood members complying with Section 3.14.2. Wood members must also have a minimum reference compression perpendicular to grain design value, $F_{c\text{-}perp}$, of 625 psi (4.31 MPa).
[3]See Section 3.14.3 for required fastener dimensions and mechanical properties.
[4]Allowable loads given are per pair of SBP plates. SBP plates must be installed in pairs.

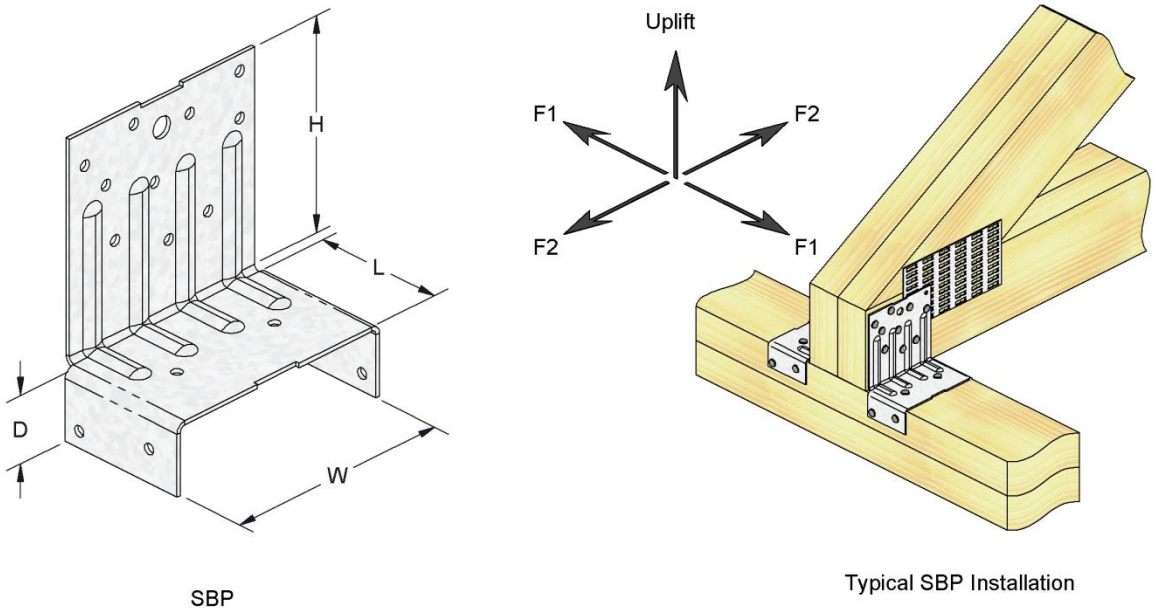

FIGURE 11—SBP SUPPLEMENTARY BEARING PLATE

TABLE 12—STC SCISSOR TRUSS CLIP ALLOWABLE LOADS[1,2,3,4]

STOCK NO.	STEEL GAGE	DIMENSIONS (in.)		FASTENERS SCHEDULE[4]				ALLOWABLE LOADS (lbs)	
				Plate		Truss		F_1	Uplift
		W1	W2	Qty.	Type	Qty.	Type	C_D=1.6	
STC24	12	$3^9/_{16}$	$1^5/_8$	6	10d-$1^1/_2$	5	10d-$1^1/_2$	605	465
STC26	12	$5^1/_2$	$1^5/_8$	6	10d-$1^1/_2$	5	10d-$1^1/_2$	605	465
STC28	12	$7^1/_4$	$1^5/_8$	6	10d-$1^1/_2$	5	10d-$1^1/_2$	605	465

For **SI:** 1 inch = 25.4 mm, 1 lb = 4.45 N.

[1]Allowable loads have been adjusted for a load duration factor, C_D, of 1.6, corresponding to a ten minute load duration (i.e., wind or earthquake loading), in accordance with the NDS. The allowable loads do not apply to loads of other durations. See Sections 4.1 and 4.2 for additional design and installation requirements.
[2]Allowable loads shown are for installations in wood members complying with Section 3.14.2.
[3]See Section 3.14.3 for required fastener dimensions and mechanical properties.
[4]The truss set into the STC connector must be laterally supported to prevent rotation in the device.

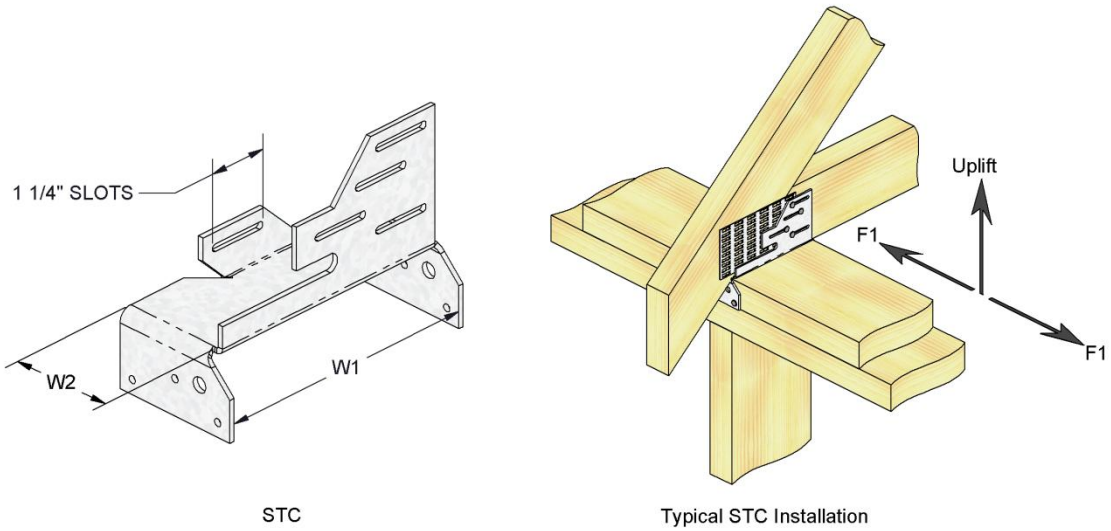

FIGURE 12—STC SCISSOR TRUSS CLIP

TABLE 13A—TSP STUD PLATE TIE[1,2,3]

Stock Number	Steel Gauge	Installation Location	Fastener Schedule				Allowable Uplift Loads (lbs)
			Stud		Plate		
			Qty	Type	Qty	Type	C_D=1.6
TSP	16	Double Top Plate	9	10d x 1 1/2	6	10d Common	870
			9	10d x 1 1/2	6	10d x 1 1/2	830
		Single Sill Plate	3	10d x 1 1/2	3	10d x 1 1/2	465

For **SI:** 1 inch = 25.4 mm, 1 lb = 4.45 N.

[1]Allowable loads have been adjusted for a load duration factor, C_D, of 1.6, corresponding to a ten minute load duration (i.e., wind or earthquake loading), in accordance with the NDS. The allowable loads do not apply to loads of other durations. See Sections 4.1 and 4.2 for additional design and installation requirements.
[2]Allowable loads shown are for installations in wood members complying with Section 3.14.2.
[3]See Section 3.14.3 for required fastener dimensions and mechanical properties.

TABLE 13B—TSP STUD PLATE TIE—RAFTER TIE APPLICATION[1,2,3]

Stock Number	Steel Gauge	Installation Location	Fastener Schedule				Allowable Loads (lbs)				
			Truss / Rafter		Plate		Uplift	Lateral			
								F1	F2	F3	F4
			Qty	Type	Qty	Type	C_D=1.6	C_D=1.6	C_D=1.6	C_D=1.6	C_D=1.6
TSP	16	Double Top Plate	9	10d x 1 1/2	6	10d Common	870	365	190	210	235
			9	10d x 1 1/2	6	10d x 1 1/2	830	365	190	210	235
		Single Top Plate	3	10d x 1 1/2	3	10d x 1 1/2	465	--	--	--	--

For **SI:** 1 inch = 25.4 mm, 1 lb = 4.45 N.

[1]Allowable loads have been adjusted for a load duration factor, C_D, of 1.6, corresponding to a ten minute load duration (i.e., wind or earthquake loading), in accordance with the NDS. The allowable loads do not apply to loads of other durations. See Sections 4.1 and 4.2 for additional design and installation requirements.
[2]Allowable loads shown are for installations in wood members complying with Section 3.14.2.
[3]See Section 3.14.3 for required fastener dimensions and mechanical properties.

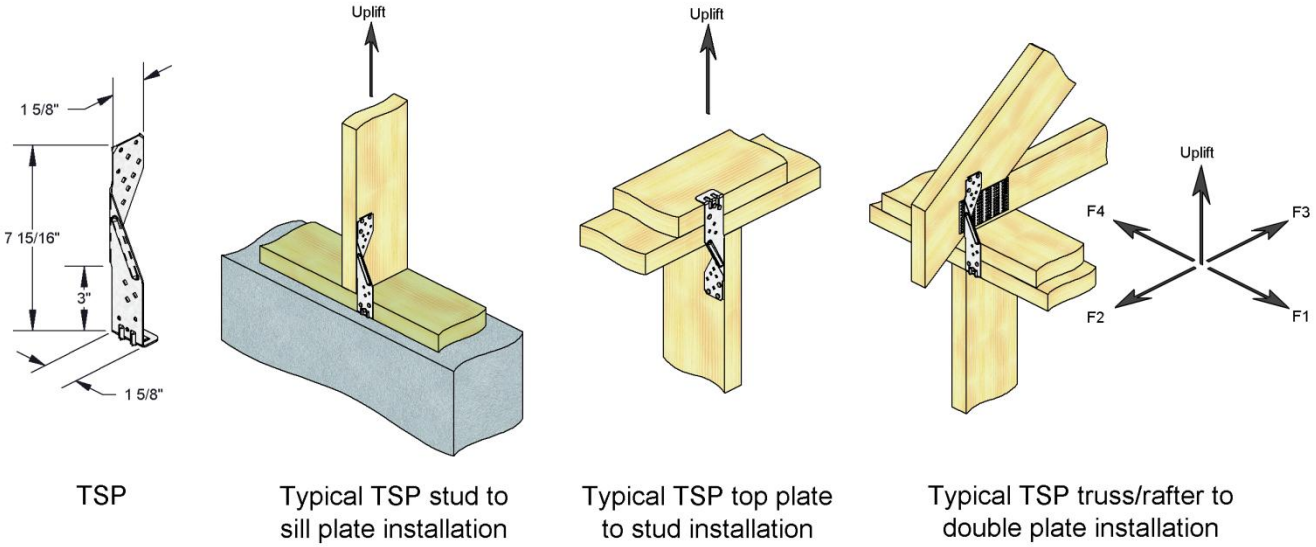

FIGURE 13—TSP STUD PLATE TIE

TABLE 14—STEEL TYPE, STRENGTH AND CORROSION RESISTANCE

PRODUCT	STEEL	COATING
BN Breakfast Nook Hanger[1]	ASTM A1011, SS designation, Grade 40	Painted
DSC4 Drag Strut Connector	ASTM A36	Painted
FTC Floor Truss Clip	ASTM A653, SS designation, Grade 40	G90[2]
GT Girder Truss Hanger[1]	No. 7 Ga. material: ASTM A1011, SS designation, Grade 40 No. 3 Ga. material: ASTM A36	Painted
HCPRS Hurricane/Seismic Anchor	ASTM A653, SS designation, Grade 40	G90[2]
HGA Hurricane Gusset Angle	ASTM A653, SS designation, Grade 40	G90[2]
HHCP Hurricane/Seismic Anchor	ASTM A653, SS designation, Grade 40	G90[2], G185[2]
HJC Hip/Jack Connector	ASTM A653, SS designation, Grade 40	G90[2]
HTC Heavy Truss Deflection Clip	ASTM A653, SS designation, Grade 40	G90[2]
LDSC4 Drag Strut Connector	ASTM A653, SS designation, Grade 40	G90[2]
RT Hurricane Tie	ASTM A653, SS designation, Grade 40	G90[2], G185[2]
SBP Supplemental Bearing Plate	ASTM A653, SS designation, Grade 40	G90[2]
STC Scissor Truss Clip	ASTM A653, SS designation, Grade 40	G90[2]
TSP Stud Plate Tie	ASTM A653, SS designation, Grade 40	G90[2]

[1]Products are welded products and are manufactured at the MiTek manufacturing facilities in Largo, FL; Tolleson, AZ; and Montgomery, MN under an approved quality control program with inspections by ICC-ES.

[2]Corrosion protection is a zinc coating in accordance with ASTM A653.

DIVISION: 06 00 00—WOOD, PLASTICS AND COMPOSITES
Section: 06 05 23—Wood, Plastic, and Composite Fastenings

REPORT HOLDER:

MITEK® INC.

EVALUATION SUBJECT:

MITEK® TRUSS CONNECTORS FOR WOOD-FRAMED CONSTRUCTION

1.0 REPORT PURPOSE AND SCOPE

Purpose:

The purpose of this evaluation report supplement is to indicate that MiTek truss connectors for wood-framed construction, described in ICC-ES evaluation report ESR-3448, have also been evaluated for compliance with the codes noted below as adopted by the Los Angeles Department of Building and Safety (LADBS).

Applicable code editions:

- 2026 *City of Los Angeles Building Code* (LABC)
- 2026 *City of Los Angeles Residential Code* (LARC)

2.0 CONCLUSIONS

The MiTek truss connectors for wood-framed construction, described in Sections 2.0 through 7.0 of the evaluation report ESR-3448, comply with the LABC Chapter 23, and the LARC, and are subjected to the conditions of use described in this supplement.

3.0 CONDITIONS OF USE

MiTek truss connectors for wood-framed construction, described in this evaluation report supplement must comply with all of the following conditions:

- All applicable sections in the evaluation report ESR-3448.
- The design, installation, conditions of use and identification are in accordance with the 2024 *International Building Code®* (IBC) or 2024 *International Residential Code®* (IRC) provisions, as applicable, noted in the evaluation report ESR-3448.
- The design, installation and inspection are in accordance with additional requirements of LABC Chapters 16 and 17, as applicable.
- Allowable loads in tables are for the wood fastening devices and their fasteners. The connected member shall be checked for capacity (which may govern).
- The supported end of joist or beam must be within $^{1}/_{4}$-inch from the supporting member.
- Solid blocking must be required for all joist hangers supporting roof joists having one end twisted more than one-half degree per foot of length relative to the other end, except as specifically noted in the evaluation report ESR-3448.
- Under the LARC, an engineered design in accordance with LARC Section R301.1.3 must be submitted.

This supplement expires concurrently with the evaluation report, reissued October 2024 and revised July 2026.

ICC-ES Evaluation Reports are not to be construed as representing aesthetics or any other attributes not specifically addressed, nor are they to be construed as an endorsement of the subject of the report or a recommendation for its use. There is no warranty by ICC Evaluation Service, LLC, express or implied, as to any finding or other matter in this report, or as to any product covered by the report.

Copyright © 2026 ICC Evaluation Service, LLC. All rights reserved.

DIVISION: 06 00 00—WOOD, PLASTICS AND COMPOSITES
Section: 06 05 23—Wood, Plastics, and Composite Fastenings

REPORT HOLDER:

MITEK® INC.

EVALUATION SUBJECT:

MITEK® TRUSS CONNECTORS FOR WOOD-FRAMED CONSTRUCTION

1.0 REPORT PURPOSE AND SCOPE

Purpose:

The purpose of this evaluation report supplement is to indicate that MiTek truss connectors for wood-framed construction, described in ICC-ES evaluation report ESR-3448, have also been evaluated for compliance with the code*(s)* noted below.

Applicable code edition*(s)*:

- *2025 and 2022 California Building Code* (CBC)

For evaluation of applicable Chapters adopted by the California Office of Statewide Health Planning and Development (OSHPD) AKA: California Department of Health Care Access and Information (HCAI) and the Division of State Architect (DSA), see Sections 2.1.1 and 2.1.2 below.

- *2025 and 2022 California Residential Code* (CRC)

2.0 CONCLUSIONS

2.1 CBC:

The MiTek truss connectors for wood-framed construction, described in Sections 2.0 through 7.0 of the evaluation report ESR-3448, comply with CBC Chapter 23, provided the design and installation are in accordance with the 2024 and 2021 *International Building Code®* (IBC) provisions noted in the evaluation report and the additional requirements of CBC Chapter 16, 17 and 23, as applicable.

2.1.1 OSHPD:

The applicable OSHPD Sections and Chapters of the CBC are beyond the scope of this supplement.

2.1.2 DSA:

The applicable DSA Sections and Chapters of the CBC are beyond the scope of this supplement.

2.2 CRC:

The MiTek truss connectors for wood-framed construction, described in Sections 2.0 through 7.0 of the evaluation report ESR-3448, comply with CRC Chapter 3, provided the design and installation are in accordance with the 2024 and 2021 *International Residential Code®* (IRC) provisions noted in the evaluation report and the additional requirements of CRC Chapter 3, as applicable.

This supplement expires concurrently with the evaluation report, reissued October 2024 and revised July 2026.

ICC-ES Evaluation Reports are not to be construed as representing aesthetics or any other attributes not specifically addressed, nor are they to be construed as an endorsement of the subject of the report or a recommendation for its use. There is no warranty by ICC Evaluation Service, LLC, express or implied, as to any finding or other matter in this report, or as to any product covered by the report.

Copyright © 2026 ICC Evaluation Service, LLC. All rights reserved.

DIVISION: 06 00 00—WOOD, PLASTICS AND COMPOSITES
Section: 06 05 23—Wood, Plastic, and Composite Fastenings

REPORT HOLDER:

MITEK® INC.

EVALUATION SUBJECT:

MITEK® TRUSS CONNECTORS FOR WOOD-FRAMED CONSTRUCTION

1.0 REPORT PURPOSE AND SCOPE

Purpose:

The purpose of this evaluation report supplement is to indicate that the MiTek Truss Connectors for Wood-Framed Construction, described in ICC-ES evaluation report ESR-3448, have also been evaluated for compliance with the codes noted below.

Applicable code editions:

- 2026 and 2023 *Florida Building Code—Building*
- 2026 and 2023 *Florida Building Code—Residential*

2.0 CONCLUSIONS

The MiTek Truss Connectors for Wood-Framed Construction, described in Sections 2.0 through 7.0 of the evaluation report ESR-3448, comply with the *Florida Building Code—Building*, and the *Florida Building Code—Residential.* The design requirements must be determined in accordance with the *Florida Building Code—Building* or the *Florida Building Code—Residential*, as applicable. The installation requirements noted in ICC-ES evaluation report ESR-3448 for the 2024 and 2021 *International Building Code®* meet the requirements of the *Florida Building Code—Building* or the *Florida Building Code—Residential*, as applicable, with the following conditions:

- For use within 3,000 feet of a saltwater coastline, fasteners and connectors must comply with Section 1711 and Table 1711.1 of the 2026 *Florida Building Code—Building* or Section R332 and Table R332.1 of the 2026 *Florida Building Code—Residential*, as applicable.
- The MiTek Truss Connectors for Wood-Framed Construction described in the evaluation report are structural connectors used for connecting wood framing members in accordance with Section 2304.10.3 of the *Florida Building Code—Building*. The connectors may also be used in structures regulated under the *Florida Building Code—Residential* when an engineered design is submitted to, and approved by, the code official, in accordance with Section R301.1.3 of the *Florida Building Code—Residential*.
- Connectors and fasteners used in contact with preservative-treated or fire-retardant-treated wood must comply with Section 2304.10.5 of the *Florida Building Code—Building* or Section R317.3 of the *Florida Building Code—Residential*, as applicable.

Use of the MiTek truss connectors for wood-framed construction has also been found to be in compliance with the High-Velocity Hurricane Zone provisions of the *Florida Building Code—Building*, and the *Florida Building Code—Residential* with the following condition:

a) For connections subject to uplift, the connection must be designed for no less than 700 pounds (3114 N).

For products falling under Florida Rule 61G20-3, verification that the report holder's quality assurance program is audited by a quality assurance entity approved by the Florida Building Commission for the type of inspections being conducted is the responsibility of an approved validation entity (or the code official when the report holder does not possess an approval by the Commission). Florida Rule 61G20-3 is applicable to products and/or systems which comprise the building envelope and structural frame for compliance with the structural requirements of the Florida Building Code.

This supplement expires concurrently with the evaluation report, reissued October 2024 and revised July 2026.

ICC-ES Evaluation Reports are not to be construed as representing aesthetics or any other attributes not specifically addressed, nor are they to be construed as an endorsement of the subject of the report or a recommendation for its use. There is no warranty by ICC Evaluation Service, LLC, express or implied, as to any finding or other matter in this report, or as to any product covered by the report.

Copyright © 2026 ICC Evaluation Service, LLC. All rights reserved.